RETUBECO

RetubeCo, Inc.

RetubeCo provides the global power generation industry with superior tooling and technical services for cost effective repairs to steam condensers and balance of plant heat exchangers

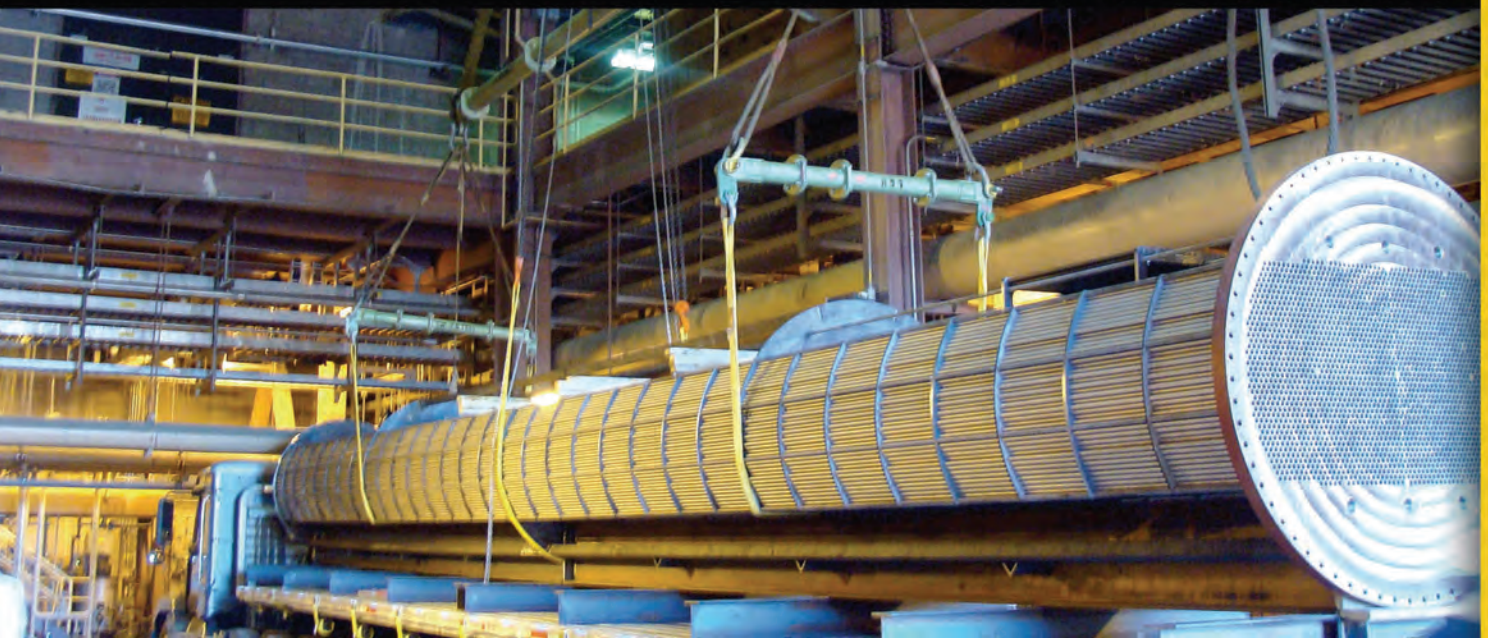

Condenser and Heat Exchanger Retubing Tools & Services

Steam Condenser Solutions

RetubeCo specializes in high production retubing tool packages, technical assistance, planning, specifications, procedures, contractor support and turnkey services to the level and circumstances necessary for the particular project. Our support is keyed to making the most effective use of time and other resources available and is focused on mitigating schedule, performance and quality risks.

RetubeCo's history of participation in hundreds of condenser retubing projects over several decades has given us a unique perspective and an unmatched record of performance in the industry.

We furnish our services to maintenance contractors, OEMs, and ultimately to fossil and nuclear powered steam electric stations.

Balance of Plant Heat Exchanger Solutions

RetubeCo provides cost effective, high quality repairs and replacements for most types of tubular heat exchangers found in power plants.

We have in house technical and manufacturing capabilities to retube, rebundle, remanufacture, or replace with like and kind, turbine lube oil coolers, hydrogen coolers, component cooling water heat exchangers, steam jet air ejectors, rotor air coolers and other balance of plant heat exchangers. We reverse engineer, create solid models, produce CAD drawings, generate CAM and NC programs and manufacture replacement tubesheets, baffles, bonnets, heads, covers or entire tube bundles and heat exchangers.

Project Planning & Technical Support

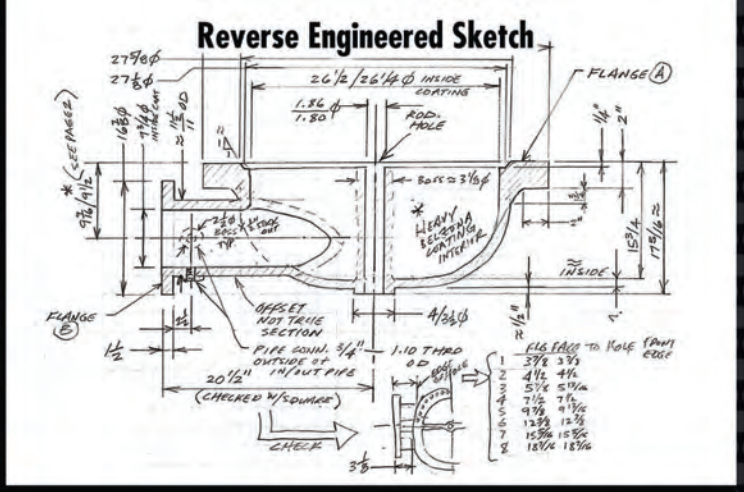

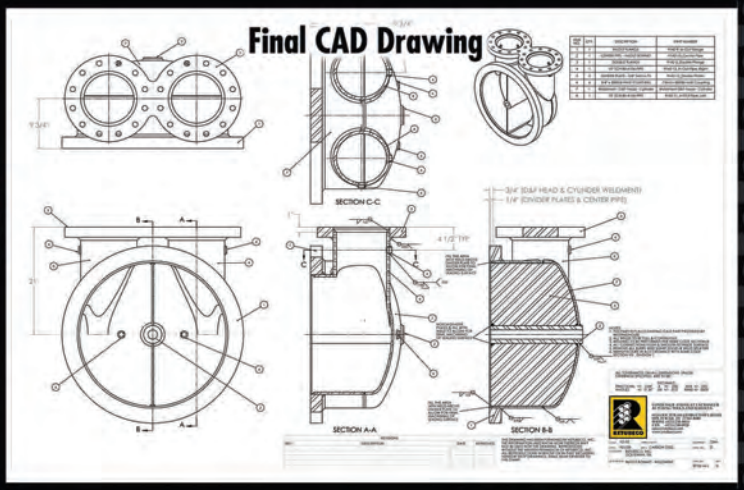

Engineers and Technicians with broad and extensive experience in all aspects of condenser and heat exchanger field service work are dedicated to the success of your project.

Onsite technical support consists of assistance in project planning and management, personnel training in the proper use of equipment and safety practices, equipment set up, maintenance and repair, and alternate methods of equipment use to accommodate varying field conditions.

A Division of Responsibility (DOR), defining more than 100 items to be considered in planning, is carefully developed for each project.

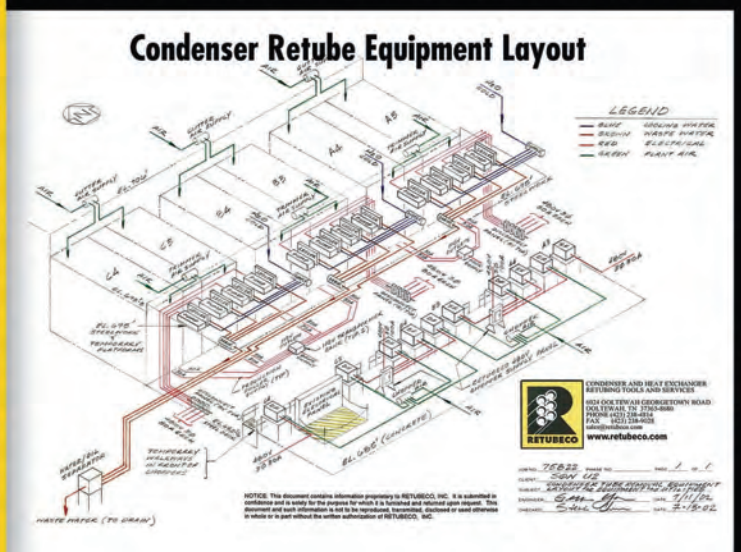

Retubing Tool Packages

Project specific tool packages are loaded into tool trailers, 20 foot sea vans, or onto flat bed trucks for shipment to job sites around the world. Typically 300 to 400 different tools are furnished for a 10,000 tube condenser. Because of our extensive experience we can provide all of the necessary specialized capital and consumable retubing tools on a lot price rental basis.

Tube Removal Tools

Hole Preparation and Tube Installation Tools

Over 500 Retubing Projects Worldwide

Service ***Performance*** ***Quality***

RetubeCo, Inc.
Condenser and Heat Exchanger
Retubing Tools & Services
6024 Ooltewah-Georgetown Rd.
Ooltewah, TN 37363, USA

www.retubeco.com
In USA: (800) 473-8823
Phone: +1 (423) 238-4814
Fax: +1 (423) 238-9028
Email: sales@retubeco.com